Y Series Silencer

User Guide

Issue 01

Date 2020-7

Copyright © Chengdu Hilin Technology Co., Ltd.

Copyright © Chengdu Hilin Technology Co., Ltd. 2020. All rights reserved.

No part of this document may be reproduced or transmitted in any form or by any means without prior written consent of Chengdu Hilin Technology Co., Ltd.

Trademarks and Permissions

Hilintec is a trademark of Chengdu Hilin Technology Co., Ltd. All other trademarks and trade names mentioned in this document are the property of their respective holders.

Notice

The purchased products, services and features are stipulated by the contract made between Chengdu Hilin Technology Co., Ltd. and the customer. All or part of the products, services and features described in this document may not be within the purchase scope or the usage scope. Unless otherwise specified in the contract, all statements, information, and recommendations in this document are provided "AS IS" without warranties, guarantees or representations of any kind, either express or implied.

The information in this document is subject to change without notice. Every effort has been made in the preparation of this document to ensure accuracy of the contents, but all statements, information, and recommendations in this document do not constitute a warranty of any kind, express or implied.

Chengdu Hilin Technology Co., Ltd.

Address:	No.3663 Section 2 Muhua Road Shuangliu District Chengdu Sichuan China 610000
Website:	http://www.mini-pump.com
Tel:	+86-28-62567958

About This Document

Purpose

This document is a description of the Y silencer series in the test period, which is used to guide the relevant technical personnel to understand the product characteristics.

Intended Audience

This document is intended for technical personnel. You should have a good understanding of your product and have a clear concept of the relevant parameters, specifications, and other information of the applications of the micro pump.

Keyword

Related parameters

Copyright © Chengdu Hilin Technology Co., Ltd.

Change History

The change history accumulates each update of this document. The latest version of the document contains all the previous updates.

Issue	Date	Product Version	Issuer	Modification
01	2020-07	1.0	XX	First official release

Copyright © Chengdu Hilin Technology Co., Ltd.

Contents

About This Document I

Change History II

Contents III

1 Product Characteristics 4

1.1 Housing Material 1

1.2 Instruction 1

1.3 Matching tube diameter 1

2 Technical Parameters 2

3 Dimensions 6

4 Appearance 7

Copyright © Chengdu Hilin Technology Co., Ltd.

1 Product Characteristics

1.1 Housing Material

The housing is made of reinforced nylon material

1.2 Instruction

The product can be installed on the front and back of the pump, and it can be connected in any direction.

When the silencer is connected to the air system, it will have a certain effect. According to the specific situation of the air system and the conditions of use, the noise reduction effect is different. One silencer is connected to the suction port and and one is connected to the exhaust port of the pump, and the effect is the best.

1.3 Matching tube diameter

Y328-21, Y328-11 matching silicone tube size: 5*9mm

Y328-33 matching silicone tube size: 7*13mm

Copyright © Chengdu Hilin Technology Co., Ltd.

2 Technical Parameters

Model	Y328-21	Y328-11	Y328-33
Housing material	Reinforced nylon	Reinforced nylon	Reinforced nylon
Nozzle outer diameter	6.5mm	6.5mm	10mm
Pressure-resistant performance	internal air pressure≤200kPa		
Air tightness	When the internal air pressure is 200kPa, it is placed in clean tap water, the water depth is less than 50mm, and there is no visible bubble leakage. If you have special requirements for air tightness, customization is available.		
Medium air temperature	0℃～100℃		
Usage	Connecting with pumps and reduce the noise,this silencer is only for use with our products!		

Copyright © Chengdu Hilin Technology Co., Ltd.

3 Dimensions

Y328-21 Overall Dimensions of Silencer
Unit:mm

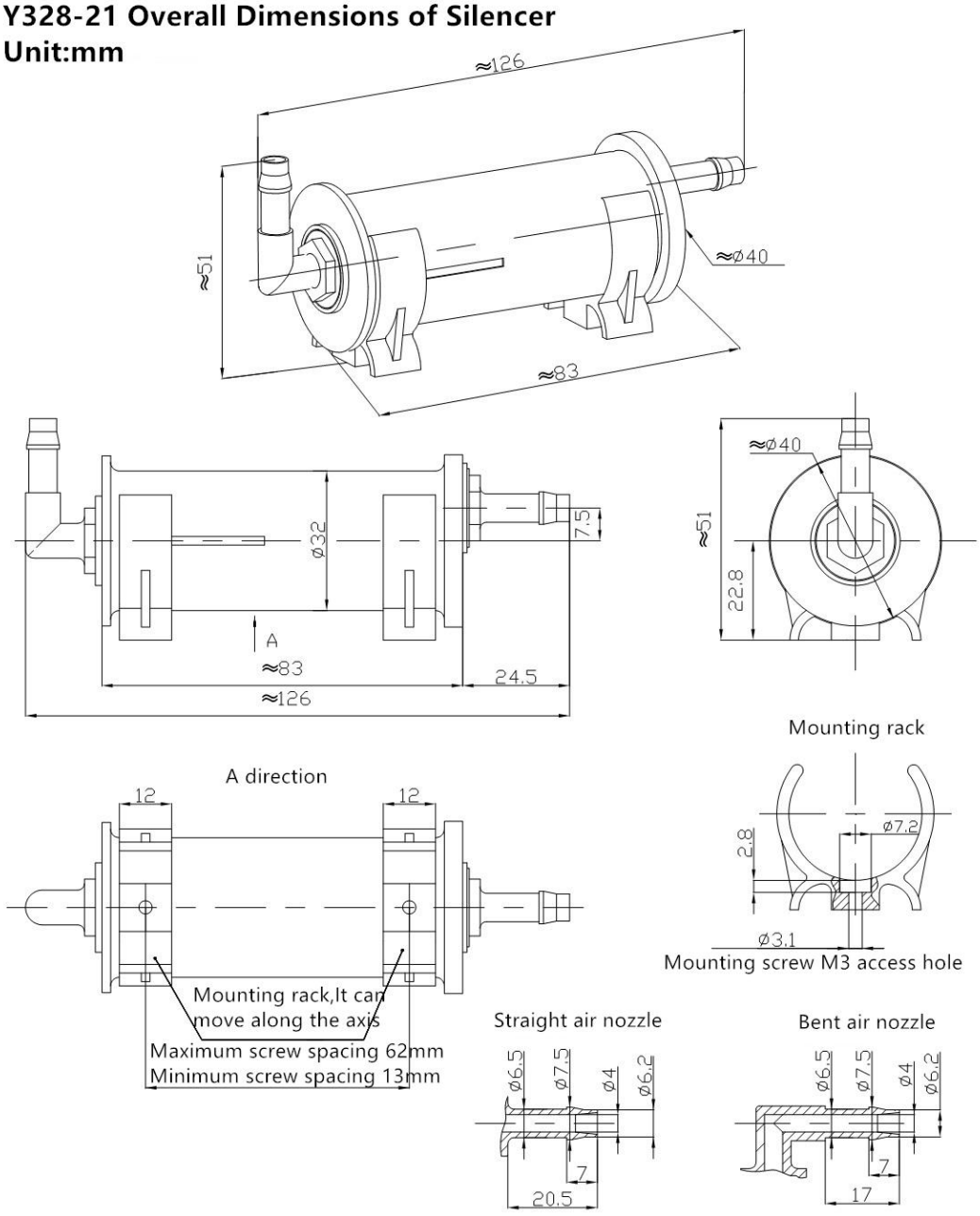

Copyright © Chengdu Hilin Technology Co., Ltd.

Y328-11 Overall Dimensions of Silencer
Unit:mm

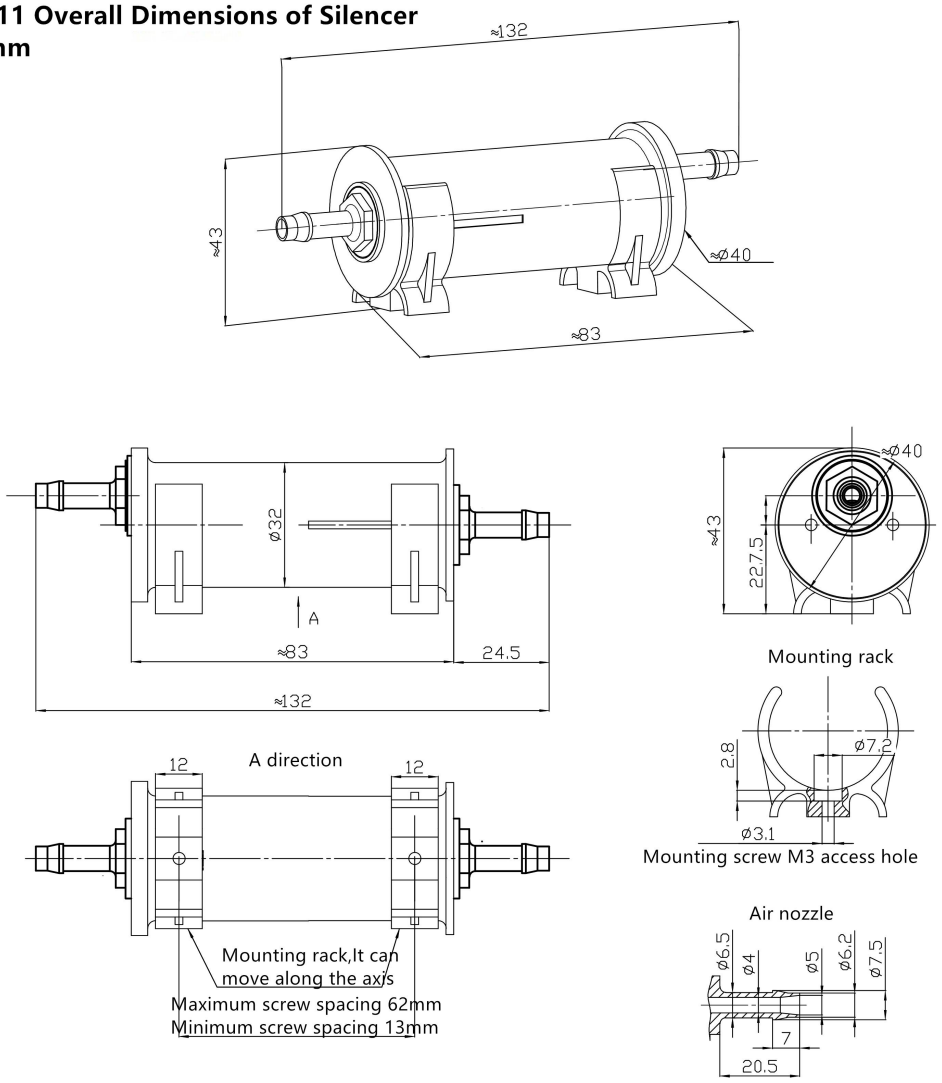

Copyright © Chengdu Hilin Technology Co., Ltd.

Y328-33 Overall Dimensions of Silencer
Unit:mm

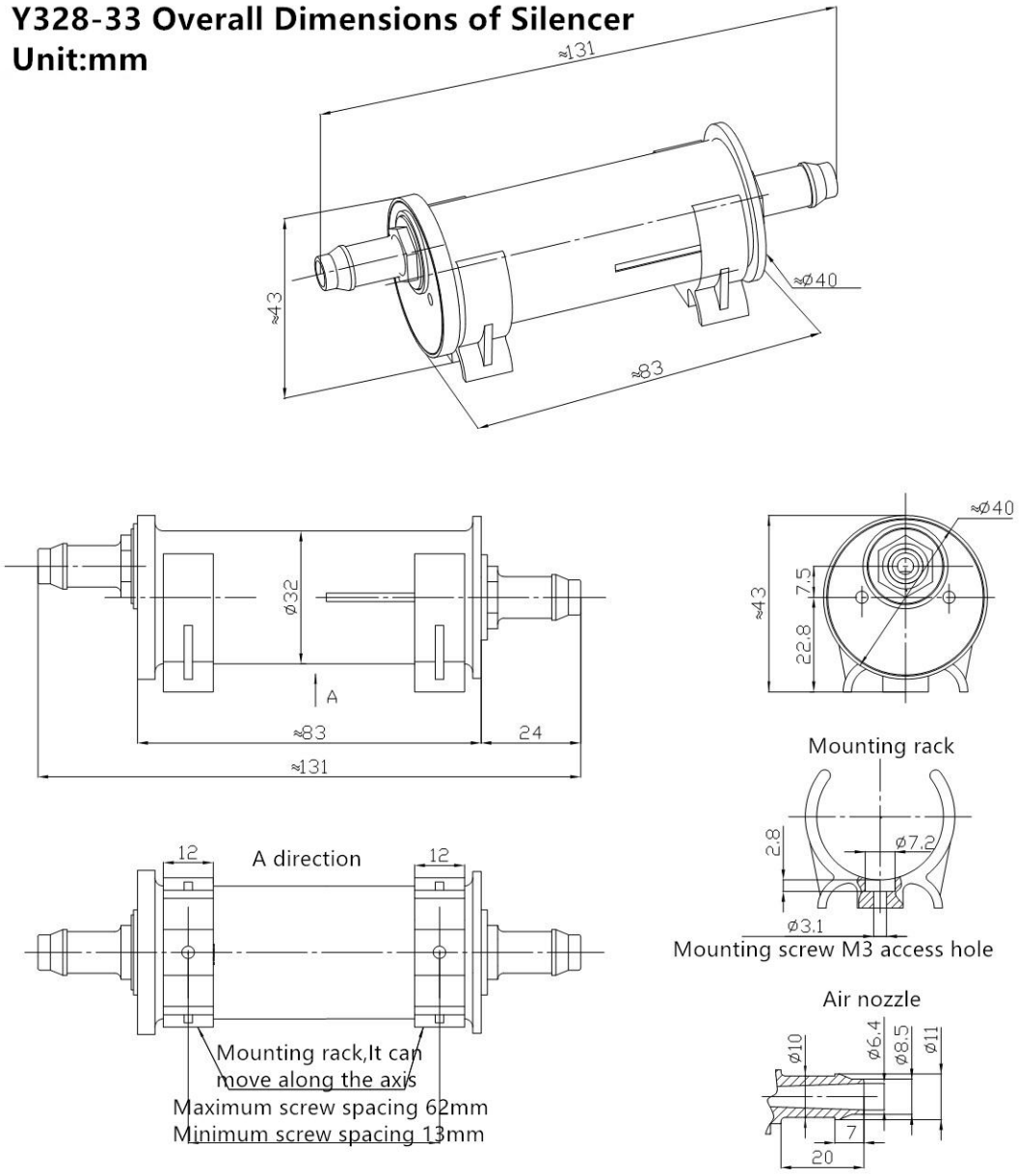

Copyright © Chengdu Hilin Technology Co., Ltd.

4 Appearance

Y328-21

Copyright © Chengdu Hilin Technology Co., Ltd.

Y328-11

Y328-33

Copyright © Chengdu Hilin Technology Co., Ltd.