D40 Micro Piston Vacuum Pump & Compressor series

User Guide

Issue 02

Date 2024-05

Trademarks and Permissions

Hilintec is a trademark of Chengdu Hilin Technology Co., Ltd.

All other trademarks and trade names mentioned in this document are the property of their respective holders.

Notice

The purchased products, services and features are stipulated by the contract made between Chengdu Hilin Technology Co., Ltd. and the customer. All or part of the products, services and features described in this document may not be within the purchase scope or the usage scope. Unless otherwise specified in the contract, all statements, information, and recommendations in this document are provided "AS IS" without warranties, guarantees or representations of any kind, either express or implied.

The information in this document is subject to change without notice. Every effort has been made in the preparation of this document to ensure accuracy of the contents, but all statements, information, and recommendations in this document do not constitute a warranty of any kind, express or implied.

Chengdu Hilin Technology Co., Ltd.

Address:	No.3663 Section 2 Muhua Road Shuangliu District Chengdu Sichuan China 610000
Website:	http://www.mini-pump.com
Tel:	+86-28-62567958

About This Document

Purpose

This document is a description of the D40 Vacuum and Compressor Piston Pump Series in the test period, which is used to guide the relevant technical personnel to understand the product characteristics.

Intended Audience

This document is intended for technical personnel. You should have a good understanding of your product and have a clear concept of the relevant parameters, specifications, and other information of the applications of the micro pump.

Keyword

PWM speed control, related parameters, wiring instructions

Change History

The change history accumulates each update of this document. The latest version of the document contains all the previous updates.

Issue	Date	Product Version	Issuer	Modification
01	2024-04	01	GJW	First official release
02	2024-05	01	LYZ	Add the revised model to the graph

Contents

1 Product Characteristics

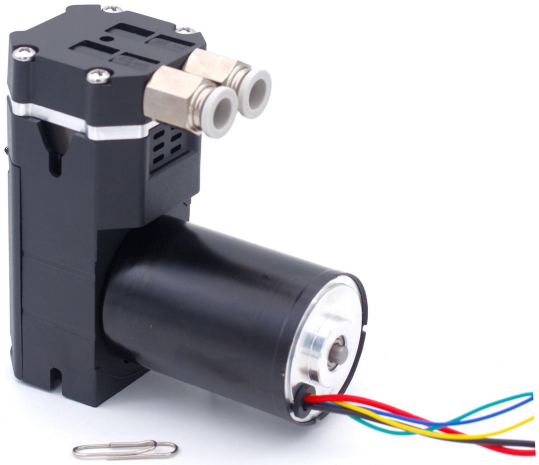

1.1 High Output Pressure

This product has a high output pressure of up to 540kPa and is available in a variety of pressure and flow specifications. Higher pressure models can be customized to meet a wide range of pressure and flow range requirements.

1.2 Excellent Pressure Resistance

This series of products can restart after shutdown under maximum negative pressure or maximum positive pressure without pressure relief, and has excellent restart performance under load.

1.3 Oil-free and Maintenance-free, No Pollution to the Medium

It adopts dry piston pump design and PTFE piston self-lubricating characteristics. No lubricating oil is allowed to be added during long-term continuous operation. It will not pollute the medium and does not require routine maintenance.

1.4 Stable and Reliable Pressure Output and Gas Transmission

Designed for high-reliability applications that operate 24/7, with stable and reliable high-pressure output and gas compression and transmission capabilities

1.5 Pipe Fittings In Various Sizes

It has two types of push-in connectors, PC6 and PC8.hose connectors, and Rp1/8 and NPSC1/8 cylindrical internal thread options to meet a wider range of pipeline connection needs.

1.6 Vacuum Pump&Compressor

Vacuum pump&compressor dual use, It can be used as a positive pressure air pump or a vacuum pump.

1.7 The Direction of the Air Nozzle can be Flexibly Rotated

According to the installation space requirements, the direction of the inlet and outlet nozzles of the pump body can be rotated 360 degrees in all directions, giving more flexible pipeline connection options.

1.8 Various Motor and Life Options

Based on the estimated continuous lifetime requirements, it can be equipped with DC brush motors and BLDC brushless motors, providing model options with high cost performance, high reliability, and low electromagnetic interference continuous operation requirements.

2 Function

2.1 Speed Control Function

The flow rate can be changed by adjusting the motor speed of the pump. Models equipped with a brushless motor can achieve speed control by adjusting the PWM duty cycle. Models equipped with a brushed DC motor can achieve PWM control by controlling the motor input voltage or using an H-bridge circuit. Carry out motor speed regulation to achieve flow control.

2.2 Start and Stop Function

Products equipped with brushless motors can control the start and stop of the pump through the start and stop control level signals, which is suitable for frequent start and stop conditions. Brush motor models can also be used for frequent start and stop conditions when paired with an H-bridge circuit.

2.3 Speed Feedback

Products equipped with brushless motors can know the speed of the pump through the speed feedback signal, which facilitates working condition monitoring and closed-loop control.

2.4 Protection Function

Models equipped with brushless motors are equipped with stall, overcurrent protection and reverse connection protection functions to reduce and avoid the possibility of accidental damage to the pump under high load, power supply system failure or misoperation.

3 Product Model Description

3.1 Brief Description of Model Naming

This series of pumps is divided into two versions: simplified version and standard version

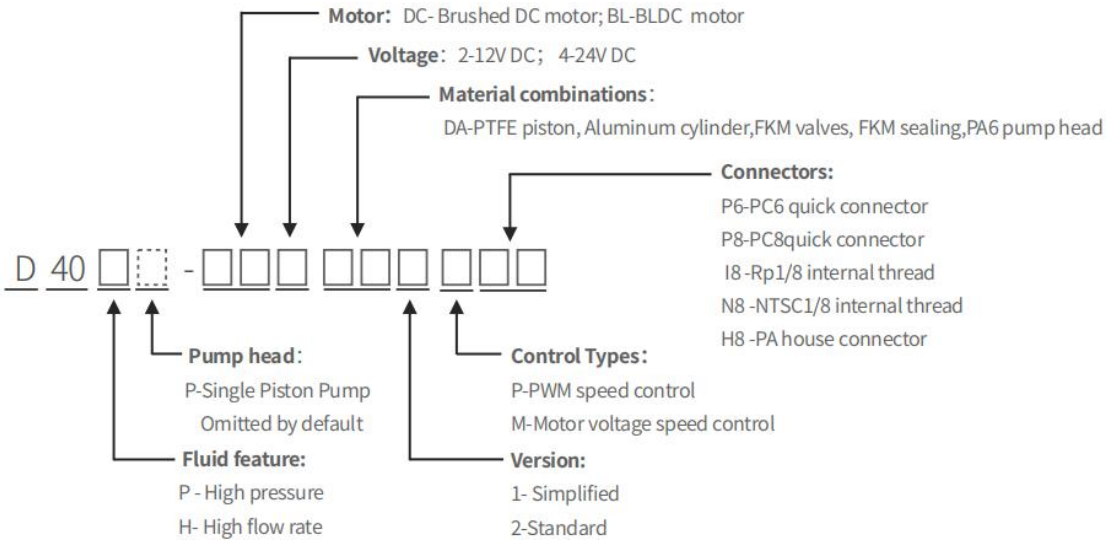

Example 1: D40H-BL2DA2PI8 (D40 high-flow air pump, standard brushless motor 12V power supply, material combination: PTFE piston, aluminum cylinder, FKM valve disc, FKM seal, reinforced nylon pump head, standard version, PWM speed control, R1/8 internal thread connector)

Example 2: D40P-DC4DA1MP8 (D40 high-pressure air pump, standard brush motor 24V power supply, material combination: PTFE piston, aluminum cylinder, FKM valve disc, FKM seal, reinforced nylon pump head, simplified version, motor voltage Speed control, 8mm outer diameter hard pipe quick-in connector)

4 Technical Parameters

4.1 Key Parameters

Model	Rated Voltage (V DC)	Load Current (mA)	Peak Flow (L/min)	Average Flow (L/min)	Max. Output Pressure (kPa)	Relative Vacuum (-kPa)	Weight(g)
Material	DC brushed motor Piston ring: PTFE Check valve and seal: FKM Cylinder and piston: Aluminum alloy Pump head: Reinforced nylon						
D40H-DC4	24	≤1.1	≥12.5	≥8.3	≥440	≥66	≈695
D40H-DC2	12	≤2.2	≥12	≥8.0	≥430	≥66	
D40P-DC4	24	≤1.2	≥8.5	≥6.0	≥540	≥68	
D40P-DC2	12	≤2.5	≥7.5	≥5.6	≥530	≥68	
Material	BLDC brushless motor Piston ring: PTFE Check valve and seal: FKM Cylinder and piston: Aluminum alloy Pump head: Reinforced nylon						
D40H-BL4	24						
D40H-BL2	12						
D40P-BL4	24						
D40P-BL2	12						

Note:

1. The DC motor input voltage is required not to exceed the rated voltage;

2. The parameters in the table are measured at the rated voltage and the maximum speed of the motor;

3. Unless otherwise specified, technical parameters are measured at 20° C and standard atmospheric pressure of 101kPa;

4. The peak flow rate in the table refers to the flow value measured with a rotameter, and the average flow rate is measured with a soap film flow-meter.

4.2 Configuration options

Material option	Standard configuration	Optional		
Pump head	Reinforced nylon			
Piston ring	PTFE			
Seal	FKM			
Cylinder	Anodized aluminum alloy			
One-way valve	FKM	PTFE		
Motor option	**Simplified version**	**Standard version**		
Motor type	DC brushed motor	BLDC brushless motor		
Rated voltage	12V/24V DC	12V/24V DC		
Connector option	**Standard configuration**	**Optional**		
Connector type	PC8 push-in quick connector	PC6 push-in quick connector Rp1/8 internal thread connector NPSC1/8 internal thread connector 8mm inner diameter hose connector		
	(See the following section for detailed connection information)			
Pump head option	**Standard configuration**	**Optional**		
Pump head direction	Standard direction	ROTA	ROTB	ROTC
	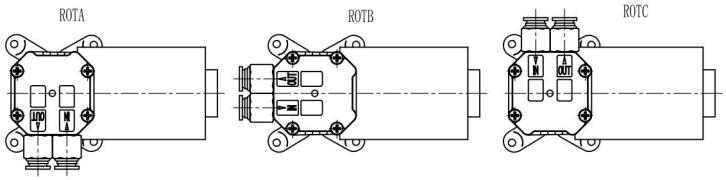 ROTA: Rotate 90° clockwise based on the standard orientation of the valve;			

Material option	Standard configuration	Optional
	ROTB: Rotate 180° clockwise based on the standard orientation of the valve; ROTC: Rotate 270° clockwise based on the standard orientation of the valve;	
	(For detailed function introduction, see the following chapters)	

4.3 Reliability Parameters

Model	D40	
Version	Simplified Version	Standard Version
Full-Load(hrs)	2000	3500*
No-Load(hrs)	3000	6000*
Motor(hrs)	5000	10000
Lifetime test instructions:	Full load life test condition: the air inlet is connected to the atmosphere, and the outlet pressure is adjusted to the rated maximum output pressure, so that the pump can run continuously for a long time	
	No-load life test conditions: Both the air inlet and the outlet port are connected to the atmosphere, allowing the pump to work continuously for 24 hours without stopping.	
	Motor life test conditions: Under good ventilation and heat dissipation conditions, the motor runs continuously without load for 24 hours without stopping.	
	Life test environmental conditions: In a clean and corrosion-free laboratory, the ambient temperature is 5~33° C, fluctuating with the climate, and the relative humidity of the environment is 50%~85%, fluctuating with the climate	
	*Represents the design sample parameters, and the official product life is under testing.	

	The source of the experimental data is from Hilin Technology Aging and life laboratory
Working Conditions	
Environment	The ambient temperature is 0℃~50℃. It is not suitable to be exposed to the sun outdoors. You should work in a clean and ventilated environment.
Medium	Permissible gas medium temperature range is 0℃～40℃.
Load	The inlet/outlet can be operated at full load (i.e. completely block the inlet/outlet), but the inlet applied load cannot exceed the maximum vacuum of the pump; the outlet applied load cannot exceed the maximum pressure of the pump.

4.4 Options of Pump Head and Modular Pneumatic Connectors

Pump Head Options	Option feature
Normal pump head orientation	The conventional pump head orientation is the standard pump head orientation, and the size of the product is minimum under this standard.
Other pump head orientations	Other pump head orientations are special installation orientations to meet the needs of different customer groups and can be adapted according to the specific needs of customers. For specific orientations, please refer to the "Installation Instructions"
Connector identification	Option feature
P8 push-in connector	PC8 push-in connector is suitable for situations where the working pressure is within 1MPa. Suitable for PU and other rigid plastic air pipes with an outer diameter of 8mm.
P6 push-in connector	PC6 push-in connector is suitable for working pressure conditions within 1MPa. Suitable for PU and other rigid plastic air pipes with an outer diameter of 6mm.
H8 hose connector	It is used for hose connector with an inner diameter of 7-8mm. It is used in situations where the working pressure is within 200kPa. It is used for soft air pipes such as silicone hoses. Pay attention to pressure limits and safety during use.
I8 internal thread connector	National standard Rp1/8 cylindrical internal thread, customers can install the air nozzle or adapter that suits their own requirements.
N8 internal thread connector	American-made NPSC1/8 cylindrical internal thread, customers can install the NTP1/8 air nozzle that suits their own requirements.

4.5 Pressure-Flow Rate Curve

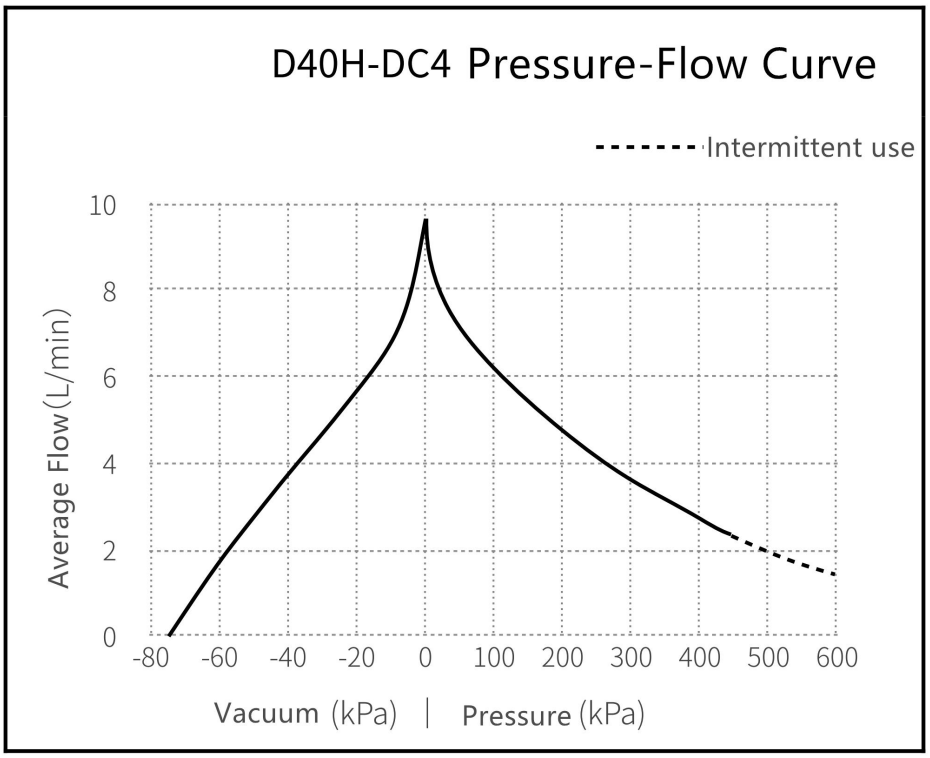

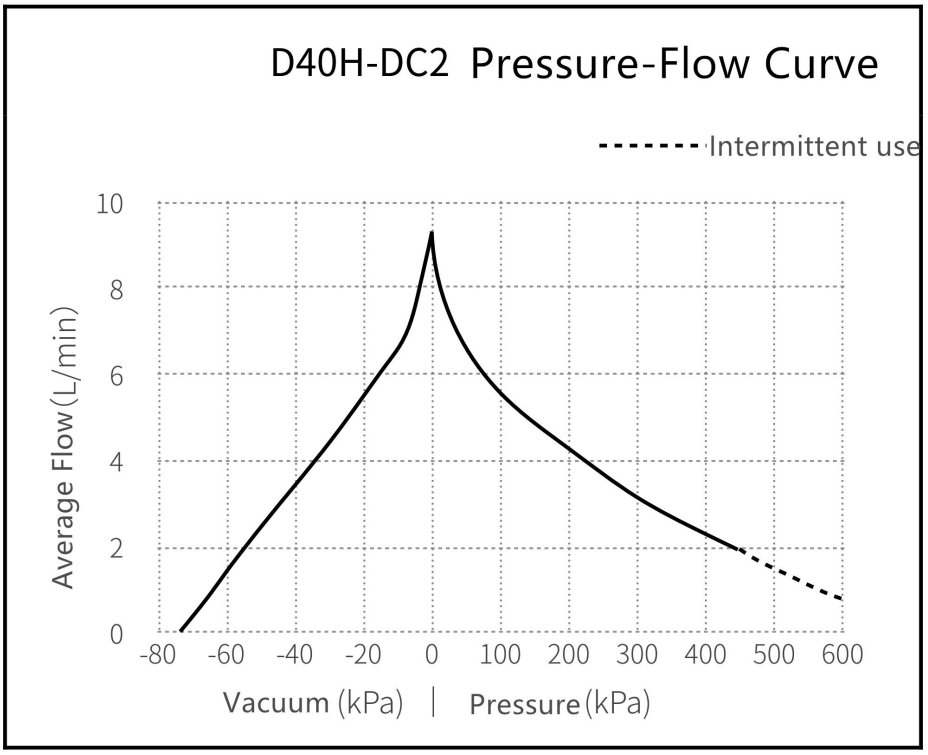

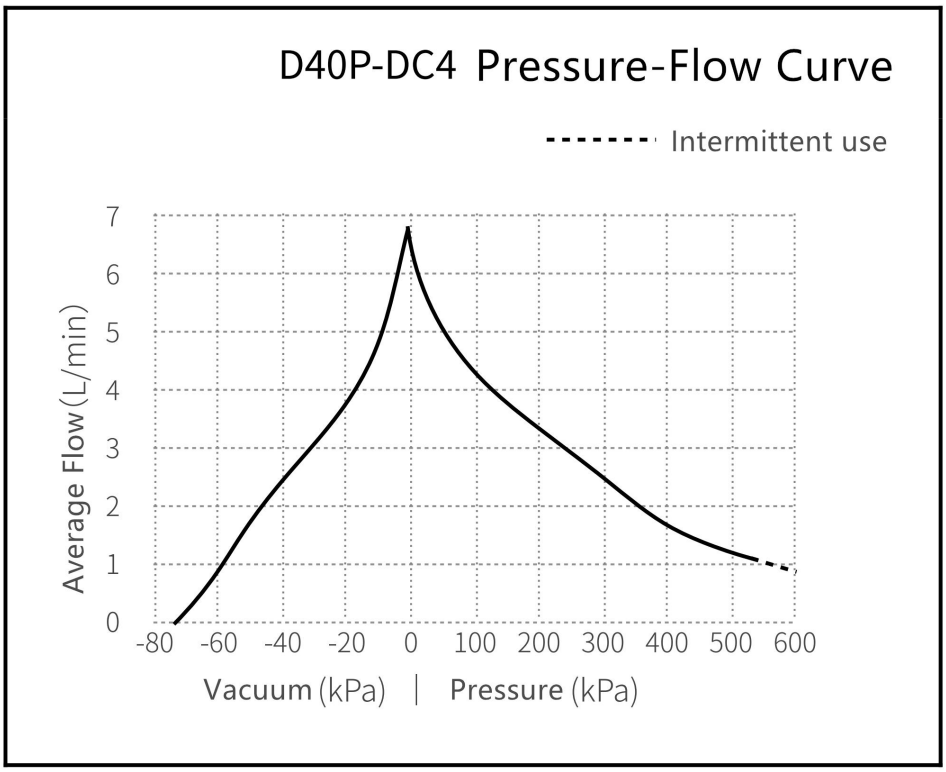

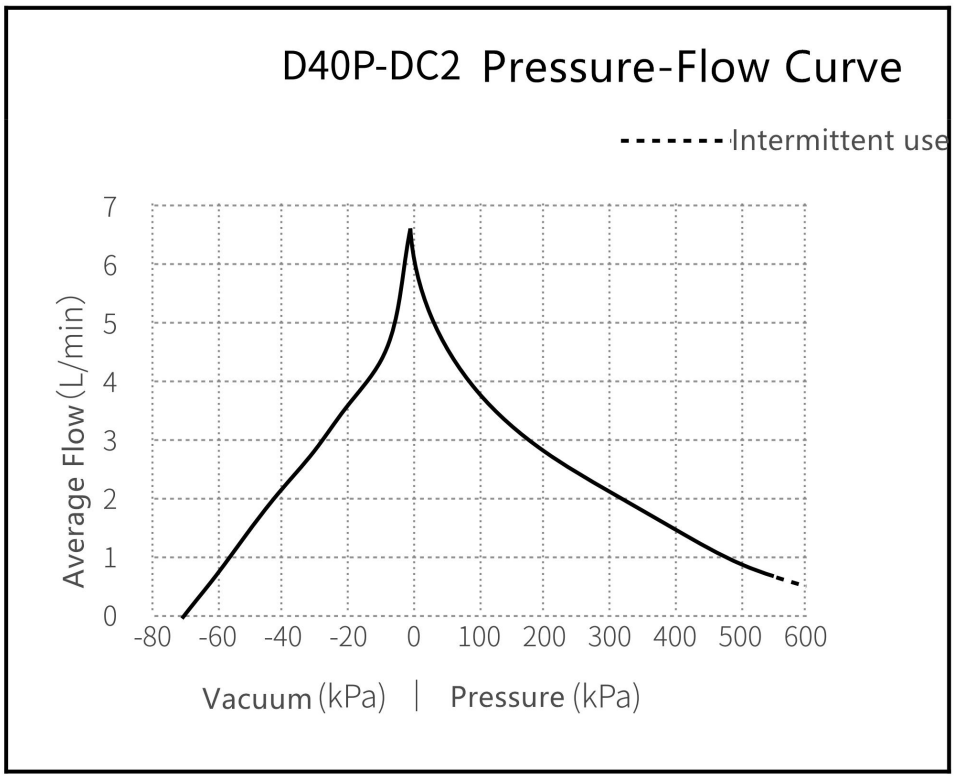

Note: 1. Because there are individual differences between different micro-pumps and different test pipelines have different effects on measured parameters, the curve is a statistical value.

2. The value of this curve is for reference only, not as a basis for product acceptance.

4.6 Starting Current Curve

5 Installation Instructions

5.1 Upright installation and fixation of pump body

This product comes with the pump with shock-absorbing feet when it leaves the factory; in order to reduce noise and vibration when the pump is running, our company recommends using ST4.2 self-tapping screws to install the shock-absorbing feet on the pump body, and then fixing them on the equipment chassis through the shock-absorbing feet. or on the panel. Each shock-absorbing foot has a Ø4mm installation through hole, which can be installed with screws with an outer diameter of no more than 4mm.

When installing the shock-absorbing feet, please install the rubber support block with adhesive backing under the motor (the side without adhesive contacts the motor):

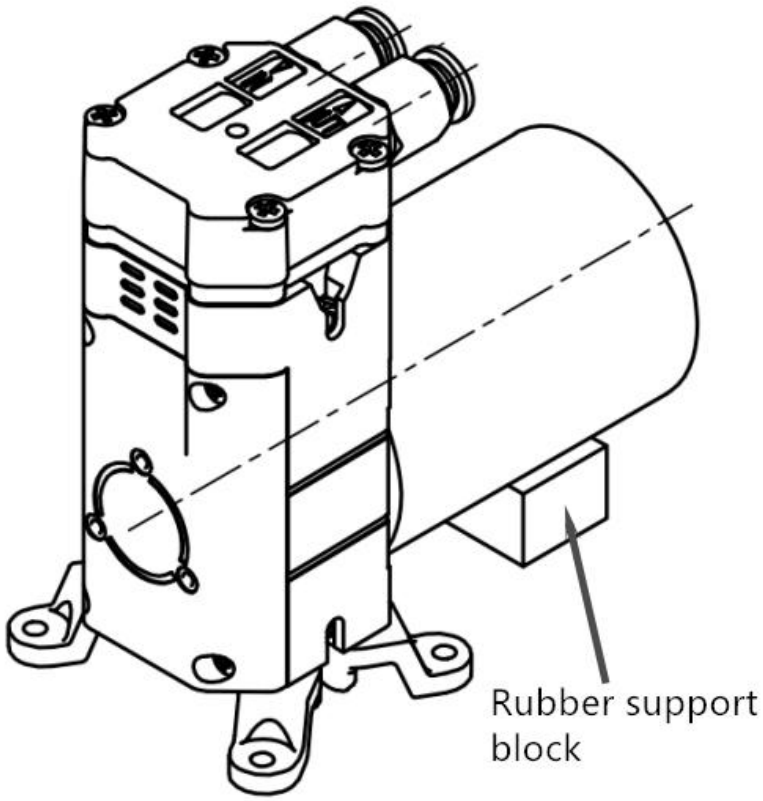

When the shock-absorbing mounting pad is not used for installation under special circumstances, the shock-absorbing feet can be removed and installed directly through the 4 mounting holes at the bottom of the pump body. At this time, ST4.2 specification self-tapping screws need to be used, and the screw thread length L ≤11+δ installation plate thickness.

example:

When the installation plate thickness δ=2mm, the self-tapping screw thread should be selected with a length L≤13mm.

Among the standard screw specifications, there are 4.5mm, 6.5mm, 9.5mm and 13mm screws to choose from. It is recommended to choose longer screws (in practice, there are 8mm, 10mm, 12mm lengths)

5.2 Side installation and fixation of pump body

The side mounting nut position is reserved on the side of the pump body of this product, which supports the pump body to be installed upside down or installed upright through the side mounting nut.

D40 Basic Type-Simplified Version

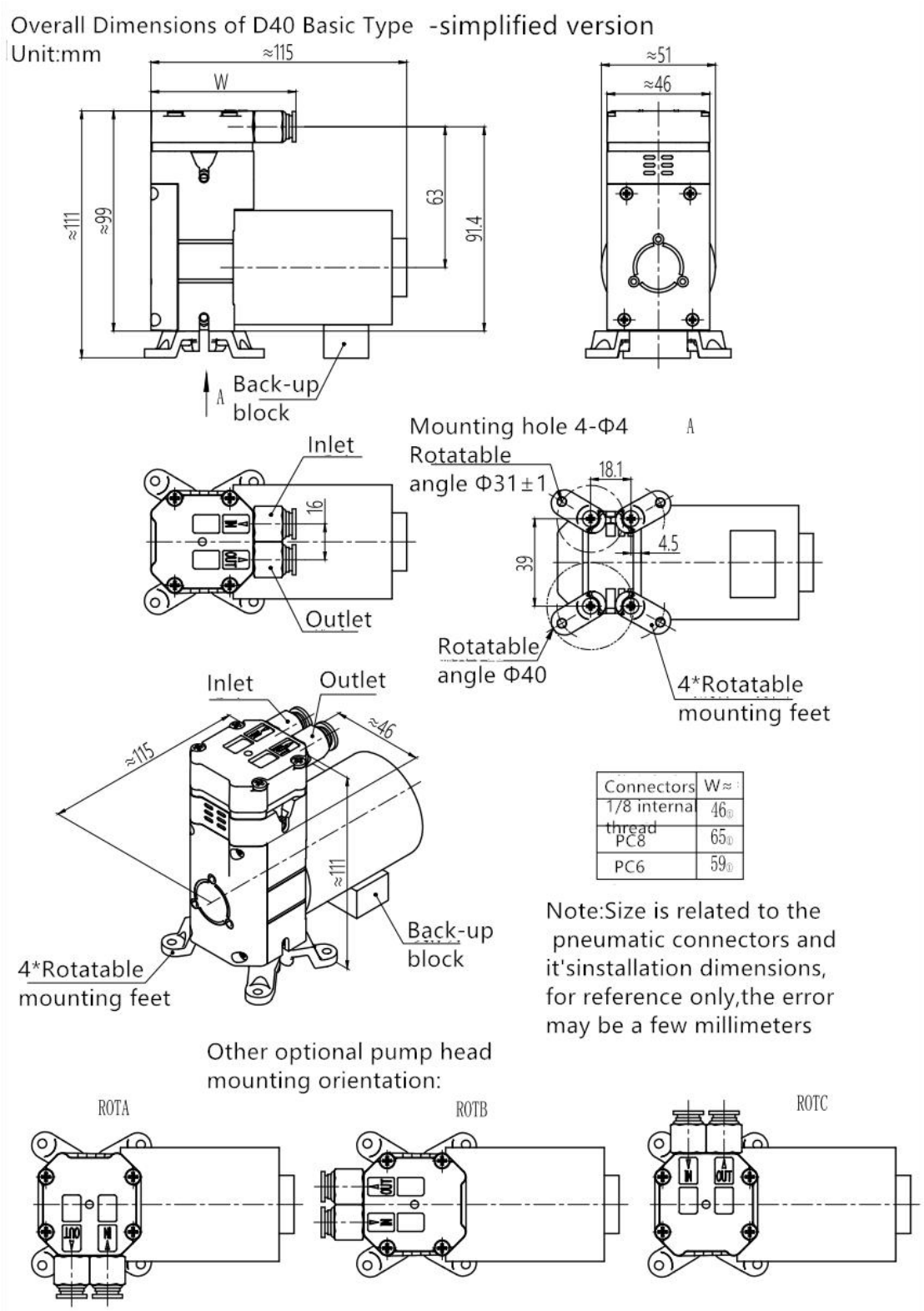

D40 Basic Type-Standard Version

Overall Dimensions of D40 Basic Type-standard version
Unit:mm

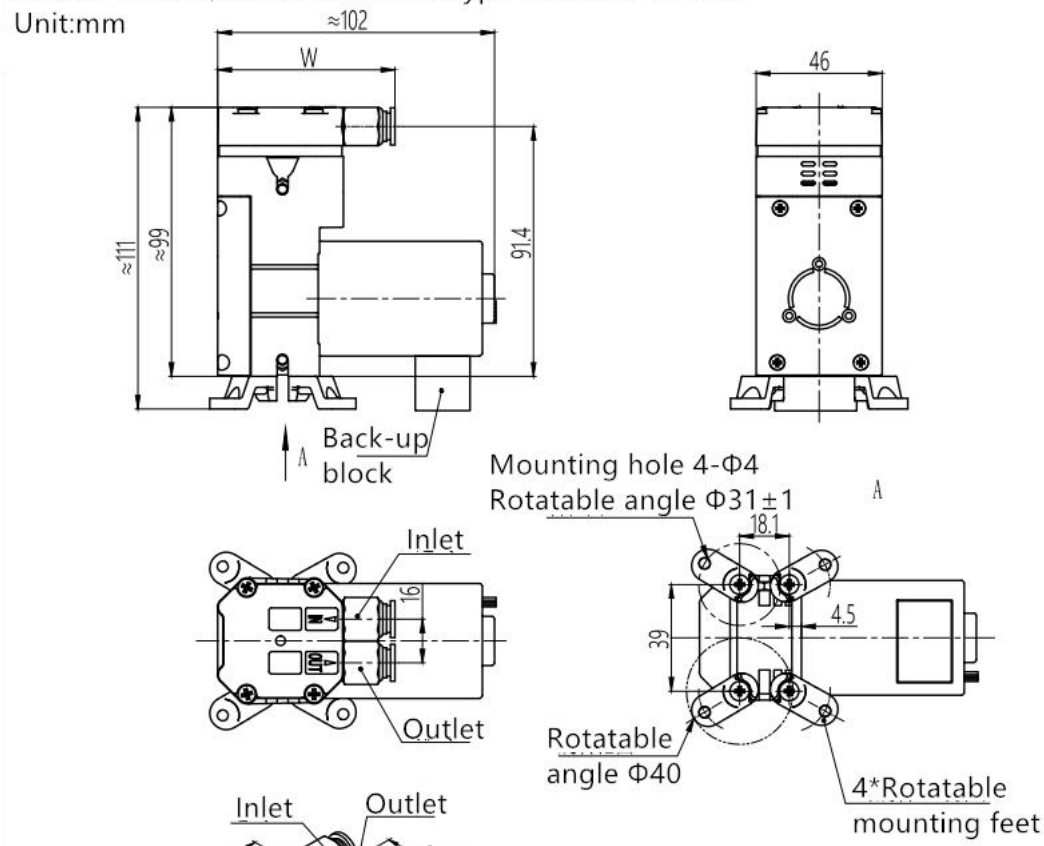

Connectors	W ≈
1/8 internal thread	46
PC8	65
PC6	59

Note:Size is related to the pneumatic connectors and it's installation dimensions, for reference only,the error may be a few millimeters

Other optional pump head mounting orientation:

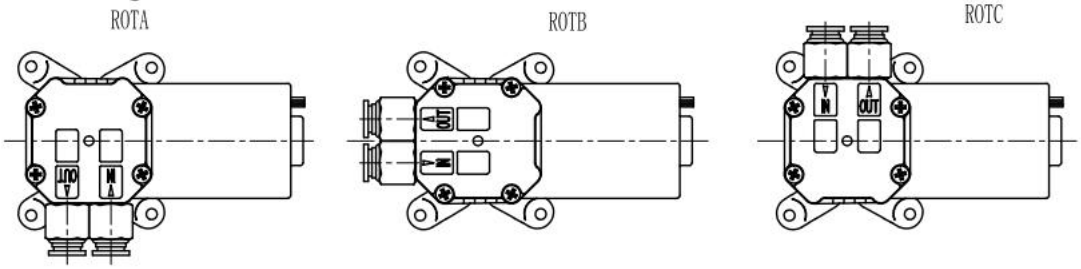

5.3 Push-in quick connector pipe connection

When choosing a quick-in connector pump head, it is recommended

to use PU pipe with an outer diameter of 6mm (PC6 quick-in connector) or 8mm (PC8 quick-in connector).

5.4 Internal thread pipe connection

When choosing a pump head with an internal thread, customers should use the air nozzle connector according to their own conditions. The internal thread has two specifications: Rp1/8 and NPSC1/8, which are the national standard 1/8 cylindrical internal thread (Rp1/8) and the American 1 /8 cylindrical internal thread (NPSC1/8).

5.5 Hose pipe connection

When selecting the H8 hose connector, it can be used to install elastic hoses with an inner diameter of 7-8mm and an outer diameter of no more than 14mm. Since the maximum working pressure of this model of pump is large and exceeds the pressure range of ordinary hoses, it is not recommended. When the working pressure exceeds 200kPa, use hoses to connect the exhaust port air lines, and you need to pay attention to usage safety and pressure limits.

6 Wiring and ControlInstructions

The wiring instructions are instructions for connecting the external power supply and signal cables of this product. This product is shipped with standard connection cables, and the cable definitions are distinguished by color. Before reading this chapter, you need to check the specific model and configuration of the motor type and motor voltage of the D40 product.

6.1 Wiring of D40 equipped with DC brush motor

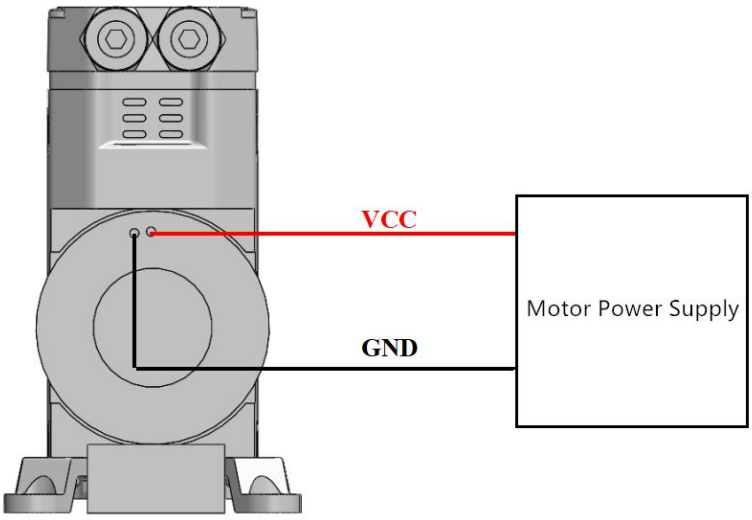

Figure 4-1 Wiring instructions for basic type

Note: The red wire of the motor lead is connected to the positive pole of the DC power supply, and the black wire is connected to the negative pole of the power supply.

S.N	Wire	Signal Name	Function	Signal Definition	Description
1	Red	Vm	positive pole of power supply	DC 12V DC24V	For 12V/24V motors, the voltage must not exceed the maximum voltage range, otherwise the motor will be burned out.

2	Black	GND	Negative pole of power supply, ground	Ground	

6.2 D40 is equipped with speed regulation and control of DC brush motor

DC brush motors can control the motor speed by adjusting the motor input voltage. When using the motor voltage for speed regulation, the input voltage must not exceed the rated voltage of the motor, otherwise the motor will be damaged in advance.

When the pump operates with load below the rated voltage, or when the pipeline pressure exceeds the rated pressure, it may cause stalling or startup failure due to excessive load; the power supply should be cut off immediately after stalling occurs. To avoid motor burnout, it is recommended to add a circuit module with stall/overcurrent protection to the power supply line to avoid motor damage.

When the air pump needs to start and stop frequently, or the DC brush motor needs to be controlled by PWM signal for speed regulation, it is recommended to add an H-bridge drive module between the power supply and the pump power supply to protect the power supply and perform PWM speed regulation.

Choosing an H-bridge drive module with stall and overcurrent protection can further protect the air pump from accidental damage.

Note: Stalled rotor will cause the motor current to increase significantly and cause heating and burning. Models equipped with brush motors need to avoid working conditions that may cause stalling, or install a stalled rotor/overcurrent protection module to protect the motor from burning.

6.3 Wiring of D40 equipped with brushless DC motor

If there is no need for speed regulation and speed feedback, the red wire is connected to the positive pole of the power supply, and the black and blue wires are connected to the negative pole of the power supply; the yellow, green, and white wires are insulated and wrapped, and the pump will work at the rated speed.

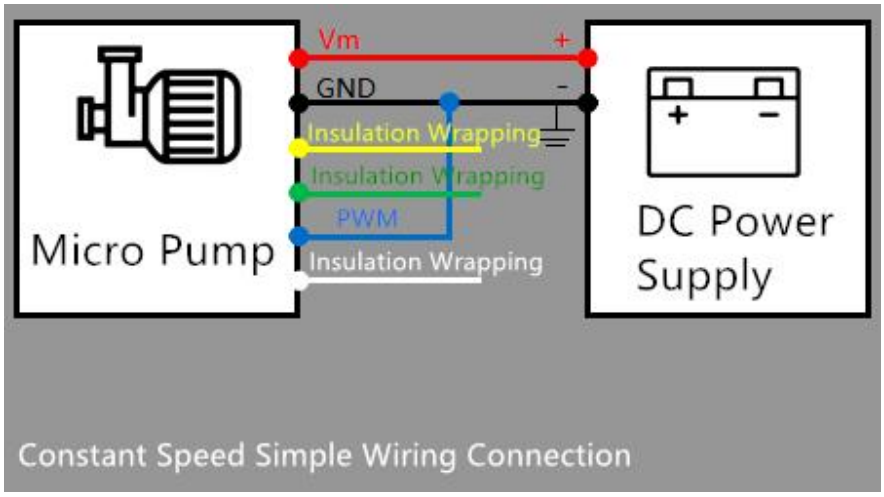

When you need to use the PWM speed control function, you need to use a signal source that supports PWM signal output (function signal generator, MCU, PLC and other controllers), connect the signal source output to the blue PWM input cable, and connect the PWM signal source ground Connect to the DC power ground, and the yellow, green, and white wires are insulated and wrapped.

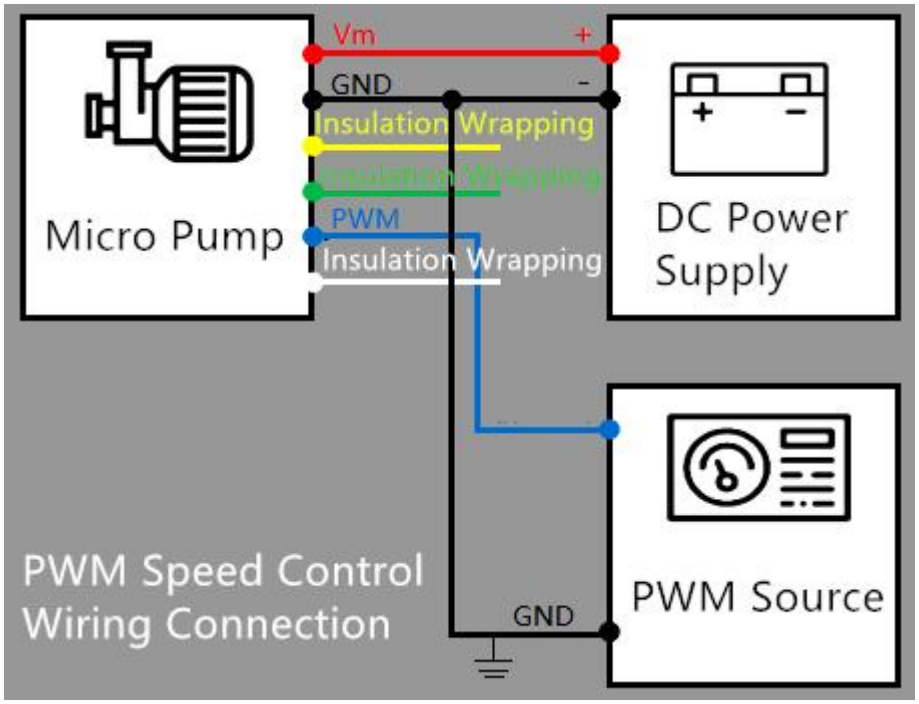

When you need to use the PWM speed regulation function, BRAKE start-stop control, and monitor the pump operation through FG signals or perform feedback control, you need to use a host controller (MCU, PLC, Controller such as the host computer), connect the signal source output to the blue PWM input cable, and connect the PWM signal source ground to the DC power supply ground. The green FG feedback signal output cable is then connected to the FG signal input end of the host controller. , white BRAKE start and stop control access controller;

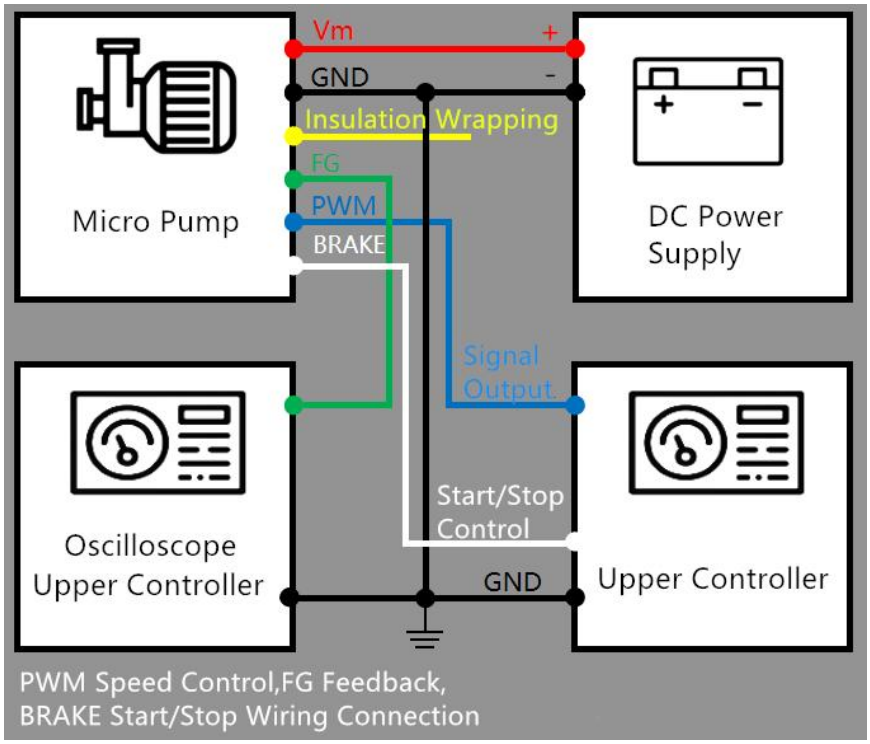

6.4 Definition of brushless DC motor signals

This product is equipped with 6 motor leads. The wiring and usage instructions are as follows.

S.N	Wire	Signal Name	Function	Signal Definition	Description
1	Red	Vm	positive pole of power supply	DC10.8~13.2V DC21.6~26.4V	For 12V/24V motors, the voltage must not exceed the maximum voltage range, otherwise the motor will be burned out.
2	Black	GND	Negative pole of power supply, ground	Ground	
3	Yellow	/	Special control wire, not useful for this product	/	
4	Green	FG	FG feedback signal	Pulse output 5V square wave signal, maximum rated current of FG feedback signal 2mA	Standard BLDC motor: Output 3 pulses/rev Type A BLDC motor: Output 6 pulses/rev
5	Blue	PWM	Pulse width speed control(PWM)	Input level signal: 0V≤Start≤0.5V 2V≤Stop≤5V	By adjusting the duty cycle of PWM, the motor speed is changed and the flow rate is adjusted. PWM input signal frequency range: 10kHz ~ 30kHz, recommended amplitude 5V, DC bias voltage 2.5V.
6	White	BRAKE	Control motor start and stop	Input level signal: 2.0V≤Start≤5.0V 0V≤Stop≤0.5V	This signal line can be used to control the start and stop of the pump. This line can be used for frequent starts and stops.Suspended default operation.

7 Cautions

Please read the instructions in this chapter carefully and follow the instructions strictly before use.

1. Only technicians with corresponding skills training can install, use, test and maintain the pump!

2. This product has no waterproof, dustproof or explosion-proof properties and cannot be used in flammable and explosive environments!

3. Please use this product within the ambient and medium temperatures, gas and electrical parameters specified and nominal in this document. Use outside the range may cause damage and safety hazards!

4. Before pumping the medium, it is necessary to evaluate the corrosion resistance and chemical compatibility of the chemical composition of the medium and the pump head, piston, one-way valve, and sealing materials!

5. Electrical connection cables should be kept away from heat sources and the connectors and cables should be insulated and protected!

6. Supporting piping components and containers must have sufficient strength to ensure personal safety!

7. Before thorough harmless treatment, our company will not accept toxic, harmful, and corrosive products that have been extracted that may pose a threat to personal harm and return them to the factory for maintenance services for the reasons of employee personal safety protection and social safety. If any For related product maintenance needs, please sign the harmless declaration form and contact our company in advance!

8. Self-disassembly and repair without the permission and guidance of the original manufacturer will cause product damage and will result in the loss of the original manufacturer's warranty service!

8 Customer Repair Declaration of Harmlessness

In order to protect the personal and environmental safety of our employees, logistics company personnel and related personnel in the whole society, please check the toxic, harmful, corrosive, biohazardous and radioactive materials before sending the repaired and returned products back to Hailin Technology. Products containing hazardous media and other hazardous media should be thoroughly cleaned and detoxified, and this detoxification statement should be included with the pump. Otherwise, our company will refuse to carry out further repairs on the above products.

Item	Content
Model	
S.N number	
List of medium components that have been extracted	
Statement content	This repair/replacement product has been thoroughly cleaned and decontaminated, and does not contain potentially corrosive, radioactive, biohazardous or other toxic and harmful hazardous components, and is not harmful to the personal safety of the carrier, maintenance personnel and other related handling personnel. Security does not pose a risk.

Company Stamp

Signature/Date

9 Appearance

D40 Brushed Motor Type

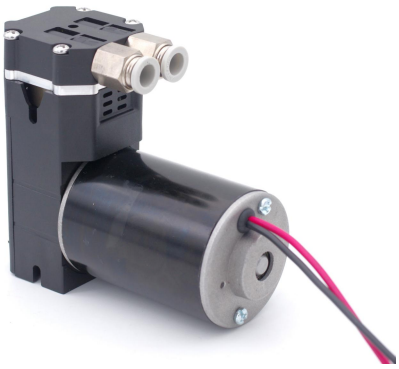

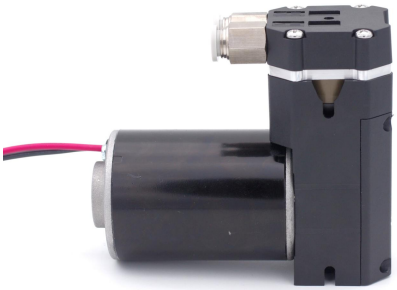

D40 Brushless Motor Type